# FLOOR KETTLES

## STATIONARY GAS MODEL AH/1

Kettle shall be a Groen Model AH/1 (specify 20, 40, 60, 80 or 100 gallons) stainless steel, self-contained, steam jacketed kettle operating from gas heated steam source contained within unit.

PROJECT NAME:

LOCATION:

ITEM NO:

QTY:

MODEL NO:

AIA NO:

SIS NO:

### AVAILABLE MODELS:

- ☐ AH/1-20 (20 GALLON)
- ☐ AH/1-40 (40 GALLON)
- ☐ AH/1-60 (60 GALLON)
- ☐ AH/1-80 (80 GALLON)
- ☐ AH/1-100 (100 GALLON)

**CONSTRUCTION:** Kettle interior shall be of type 316 stainless steel, with solid one-piece construction. All exposed surfaces shall be stainless steel. All controls shall be contained within front control enclosure. Kettle body is sheathed in stainless steel and insulated with fiber bat insulation. Unit provided with three adjustable legs for leveling. Faucet mounting bracket is standard.

**FINISH:** Interior of kettle shall be polished to a 180 emery grit finish. Exterior shall be finished to a uniform #3 satin finish ensuring maximum ease in cleaning and maintaining appearance.

### ASME CODE, CMA (FORMERLY AGA) DESIGN CERTIFIED, CRN REGISTERED:

Unit shall be ASME shop inspected, stamped and registered with the National Board for operation up to a maximum working pressure of 30 PSI. Unit shall be Design Certified by the Canadian Standard Association. Unit shall be registered in Canada with a CRN number.

**SANITATION:** Unit shall be designed and constructed to meet NSF requirements and be NSF listed.

**DRAWOFF VALVE:** Unit shall have a 2" sanitary tangent drawoff which is made of 316 stainless steel. Valve has durable insulated handle, rubber compression sealing disk and is easy to disassemble without tools. The drain outlet shall be equipped with a removable 1/4" perforated stainless steel strainer.

**COVER:** Cover furnished on 20 gallon units shall be hinged, dome one-piece unit. Units of 40 to 100 gallon capacity shall be furnished with No. 51 counterbalanced actuator designed to maintain the cover in an open or closed position.

**CONTROLS:** All controls shall be contained in a stainless steel enclosure. Controls include a regulating thermostat, pressure gauge, power-ON switch, power-ON indicator light, heat indicator light, low water indicator light, water sight gauge, pressure safety valve, pressure limit control, low water cut off, a gas regulator valve and electronic ignition module; with all operating controls front mounted.

**PERFORMANCE FEATURES:** Unit shall be thermostatically controlled to automatically shut off when desired temperature is reached and turn on when product temperature drops below desired setting. Electronic ignition to standing pilot is standard on all models. Outer sheathing and fiber insulation retain heat and keep kettle exterior cool to the touch.

### SELF-CONTAINED STEAM SOURCE:

Kettle shall have a gas-heated, self-contained steam source to provide kettle temperatures of 150 to 270°F. Unit shall be factory charged with water and rust inhibitor to ensure long life and minimum maintenance.

**INSTALLATION:** Unit requires 1/2" NPT gas line connection and 115 volt electric supply to operate controls. No remote steam source required.

**ORIGIN OF MANUFACTURE:** Designed and manufactured in the United States.

Stainless Steel Steam Jacketed Kettle, Floor Mounted, Stationary, Self-Contained, Gas-Heated, 20, 40, 60, 80 or 100- Gallon Capacity. Model AH/1 shown.

### OPTIONS/ACCESSORIES:

- ☐ Basket inserts (TRI-BC)
- ☐ Water fill faucets
- ☐ 3" tangent draw-off valve with
- ☐ 1/4" perforated disk strainer
- ☐ 1/8" perforated disk strainer
- ☐ 1/4" perforated disk strainer
- ☐ Solid disk strainer
- ☐ Other supply voltages
- ☐ Kettle brush kit
- ☐ Contour measuring strip
- ☐ Gallon etch marks

| GAS SUPPLY SPECIFICATIONS | | | | | |
|---|---|---|---|---|---|
| MODEL | AH/1-20 | AH/1-40 | AH/1-60 | AH/1-80 | AH/1-100 |
| NATURAL GAS BTU/HR | 85,000 | 100,000 | 145,000 | 145,000 | 145,000 |
| PROPANE GAS BTU/HR | 85,000 | 85,000 | 145,000 | 145,000 | 145,000 |

| RECOMMENDED INCOMING GAS FEED RATE INCHES WATER COLUMN | |
|---|---|
| NATURAL GAS | 4.5" W.C. MIN. |
| | 14" W.C. MAX. |
| PROPANE GAS | 11" W.C. MIN. |
| | 14" W.C. MAX. |

| TABLE OF DIMENSIONS | | | | | | | | | | |
|---|---|---|---|---|---|---|---|---|---|---|
| CAP. | 20 GAL. 75 L | | 40 GAL. 150 L | | 60 GAL. 225 L | | 80 GAL. 300 L | | 100 GAL. 378 L | |
| DIM. | INCH | MM | INCH | MM | INCH | MM | INCH | MM | INCH | MM |
| A | 20 | 508 | 26 | 660 | 30 | 762 | 31 3/4 | 806 | 31 3/4 | 806 |
| B | 26 1/8 | 664 | 32 3/8 | 822 | 36 | 914 | 37 3/4 | 959 | 37 3/4 | 959 |
| C | 24 | 610 | 30 3/8 | 772 | 33 1/2 | 851 | 35 3/4 | 908 | 35 3/4 | 908 |
| D | 26 1/2 | 673 | 29 1/8 | 740 | 29 1/2 | 749 | 30 1/2 | 775 | 30 1/2 | 775 |
| E | 50 3/4 | 1289 | 56 1/4 | 1429 | 58 1/4 | 1480 | 61 1/4 | 1556 | 61-1/4 | 1556 |
| F | 39 1/2 | 1003 | 43 1/4 | 1099 | 46 1/4 | 1175 | 48 | 1219 | 48 | 1219 |
| G | 33 1/2 | 851 | 33 | 838 | 38 1/8 | 968 | 43 1/4 | 1099 | 43 1/4 | 1099 |
| H | 40 | 1016 | 41 | 1041 | 48 7/8 | 1241 | 56 1/2 | 1435 | 62 1/2 | 1588 |
| J | 9 | 229 | 9 | 229 | 11 | 279 | 11 1/2 | 292 | 11 1/2 | 292 |
| K | 18 1/2 | 470 | 16 3/4 | 425 | 21 3/8 | 543 | 24 1/4 | 616 | 24 1/4 | 616 |
| L | 6 3/4 | 171 | 6 | 152 | 6 1/8 | 156 | 8 1/2 | 216 | 8 1/2 | 216 |
| M | 73 | 1854 | 74 3/4 | 1899 | 76 5/8 | 1946 | 91 1/2 | 2324 | 97 1/2 | 2477 |
| N | 6 | 152 | 6 | 152 | 7 | 178 | 7 | 178 | 7 | 178 |
| P | 17 1/2 | 445 | 21 3/8 | 543 | 24 5/8 | 625 | 29 1/2 | 749 | 35 1/4 | 895 |
| R | 17 1/2 | 445 | 21 | 533 | 16 5/8 | 422 | 24 1/2 | 622 | 24 1/2 | 622 |
| S | 12 | 305 | 12 | 305 | 12 | 305 | 12 | 305 | 12 | 305 |

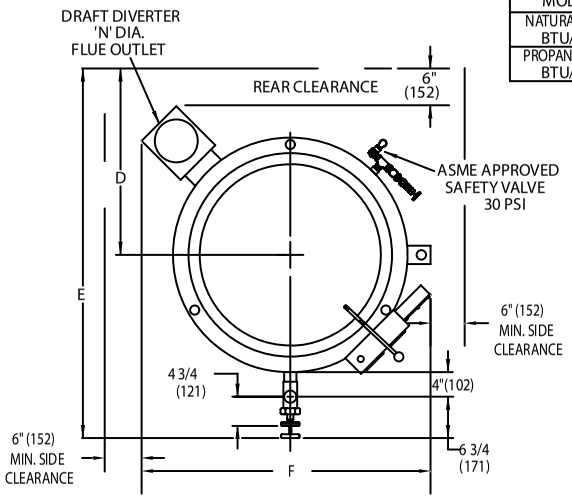


TOP VIEW

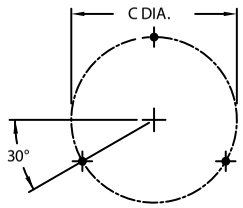


KETTLE LEG POSITION

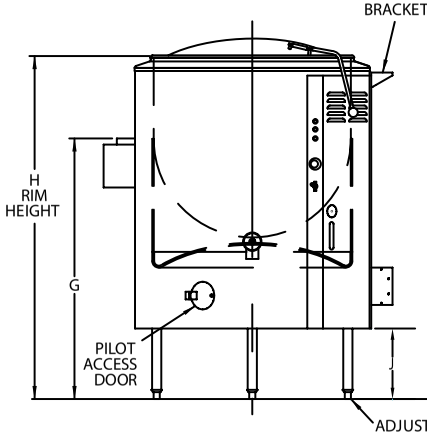


FRONT VIEW

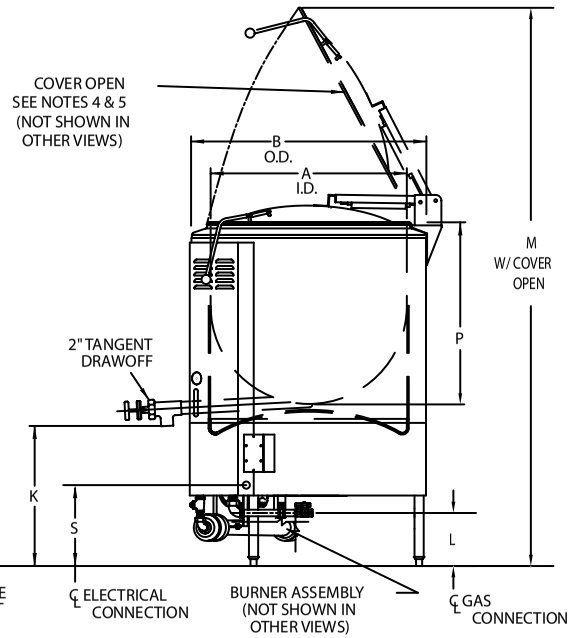


RIGHT SIDE VIEW

SERVICE CONNECTIONS AND NOTES:

1. ELECTRICAL CONNECTION: 115V, 1 PH, 60 HZ, 2 AMPS
2. GAS CONNECTION: 1/2 NPT.
3. MINIMUM CLEARANCE REQUIRED.
4. MODEL #41 HINGED COVER IS STD. ON 20 GAL. SIZE.
5. MODEL #51 POWER AID COVER (SHOWN) STD. ON 40, 60, 80 & 100 GAL. SIZES.
6. SINGLE OR DOUBLE PANTRY FAUCETS ARE OPTIONAL.
7. 3" TANGENT DRAWOFF IS OPTIONAL.
8. DIMENSIONS IN BRACKETS ( ) ARE MM.

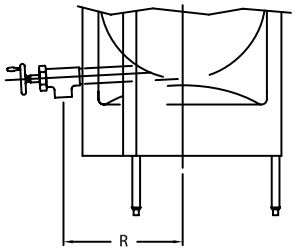


OPTIONAL 3" TANGENT DRAWOFF

SCALE: .04 =1
DO NOT SCALE DRAWING

P/N 127333 REV C

1055 Mendell Davis Drive, Jackson, MS 39272, 888-994-7636, unifiedbrands.net

© 2013 Unified Brands. All Rights Reserved. Unified Brands is a wholly-owned subsidiary of Dover Corporation.